A4 Portable Printer

Quick Installation Guide

RONGTA

A4 Portable Printer

Quick Installation Guide

Please keep this guide for your reference

Product Parameters

Product Name: A4 Portable Printer

Product Model: PN81

Battery Paramete: 11.1V 2600mAh

Operating Temperature: 0°C~45°C

Weight: Approx. 1kg(including battery)

Dimensions: 277*96.5*54.3mm

Accessories

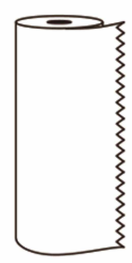

Thermal paper

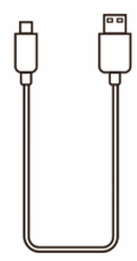

Data cable

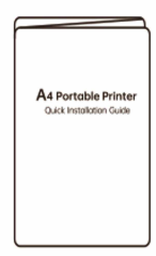

Quick Installation Guide

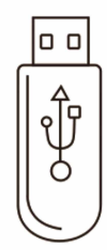

USB Disk (Assorting)

Product Introduction

Front View:

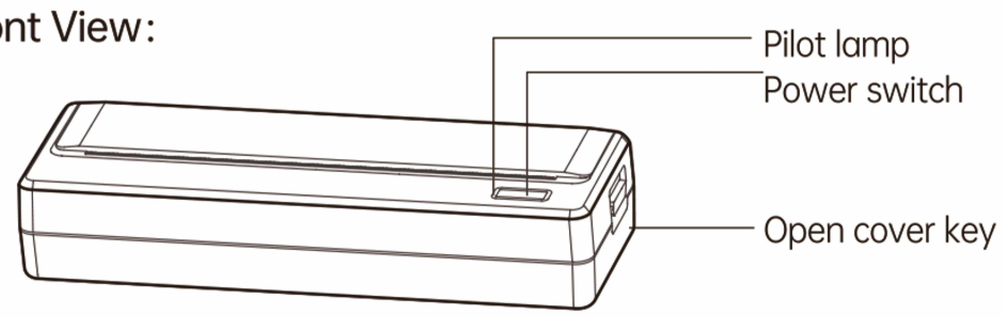

Rear View:

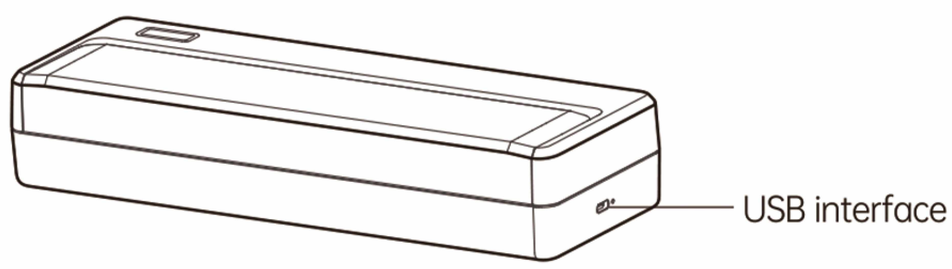

Inside view

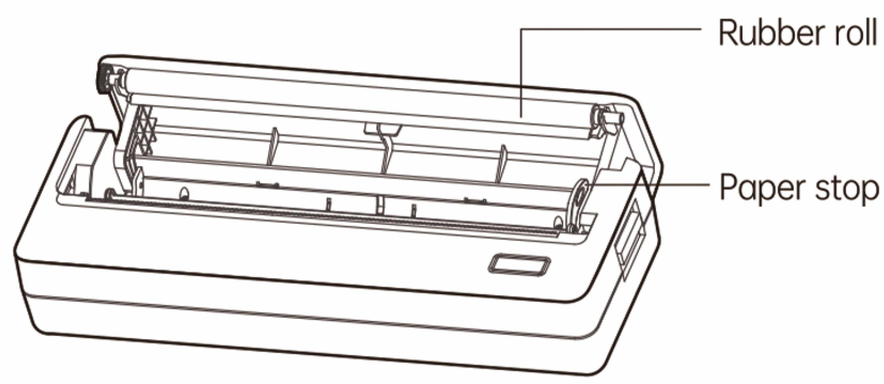

☺ The pictures are for reference only, please subject to practicality

Loading Paper Roll

1. Open the top cover

Press the right cover button to open the top cover.

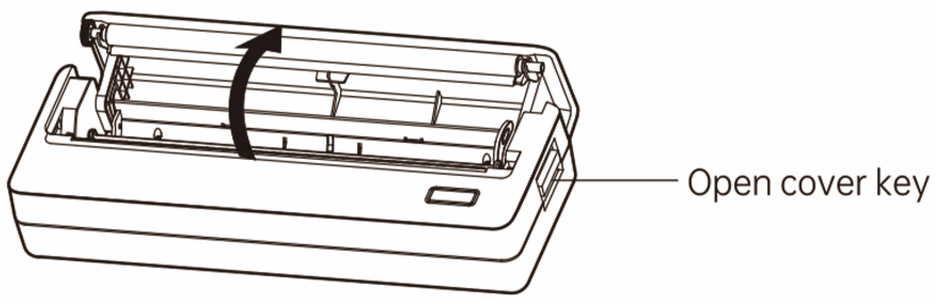

2. Remove the paper roll

Remove the supplied paper roll and tear it apart along the edge.

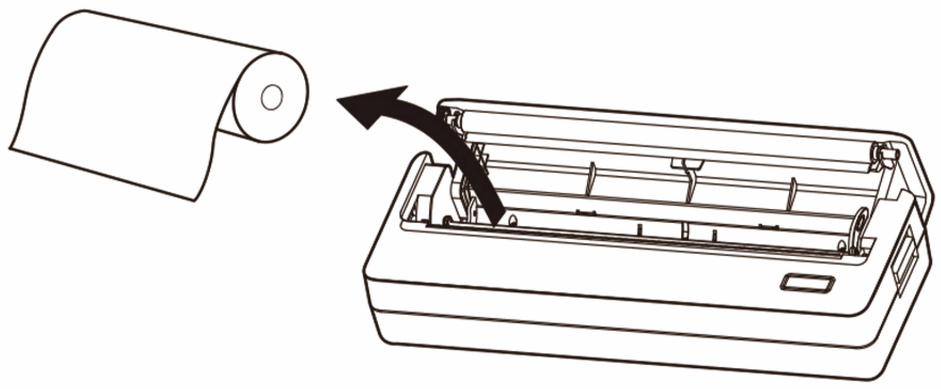

3. Load the paper roll

Load the roll back into the bin and pull the paper to the printer edge near the outlet. Please adjust the stopper according to the paper width.

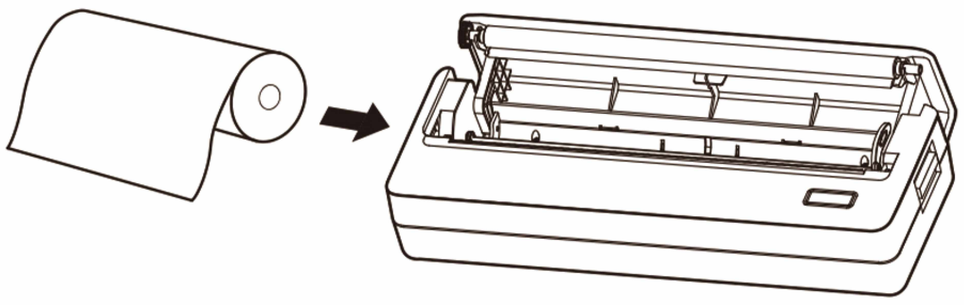

4. Close the top cover

Close the top cover after loading paper. Please make sure both sides click into place.

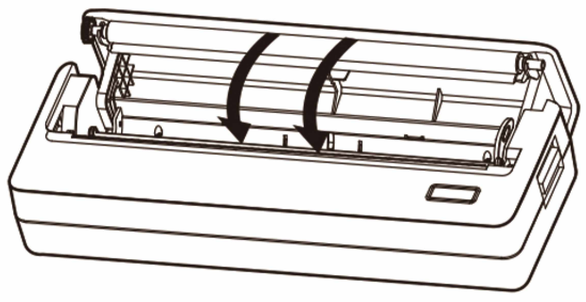

Power On

1. Power on

Press and hold the power button for 3 seconds to turn on the printer;

⚠ Note: In the startup state, long press the power button for 3 seconds to shut down

Printing from Windows PC

1. One end of the USB data cable is connected to the computer, and the other end is connected to the side USB interface of the printer;
2, please turn on the printer;
3. Download the local printer driver on the official website of Rongta and install it into the computer;
4, add a printer on the computer side, establish a communication connection, you can print documents through the computer;

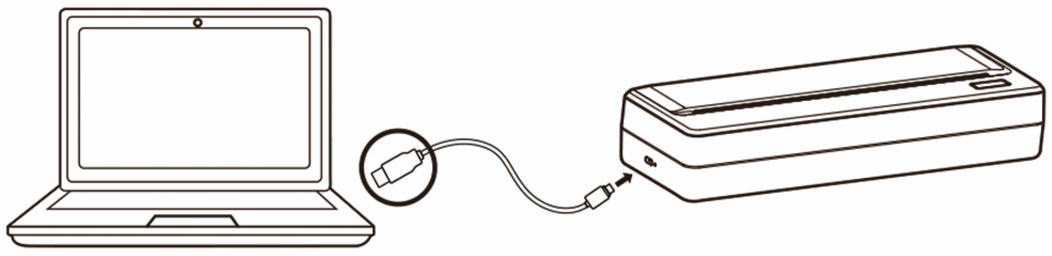

Printing Wirelessly from Mobile Phone

1. APP download

Search and download

2. Connect the printer

(1) Open the APP, click "" in the upper right corner, and the system will automatically search and display the name of the printer.
Bluetooth Select "PN81-XXXX" (XXXX is the last four digits of the Bluetooth address) and click to connect:
(2) If the connection is successful, "Connect success" will be displayed, and the main page of the APP will be returned;

3. Print

(1) Open the SoPrint APP;
(2) Select the file to be printed from the Print picture/Print file menu on the home page of the APP. Set the picture and click print after finishing.

⚠ Note: Please refer to the latest version for APP operation;

Battery Charging

When the battery is low, the red indicator will light up, please use the supporting USB cable to charge it in time. If you continue to print, the printer may automatically shut down.

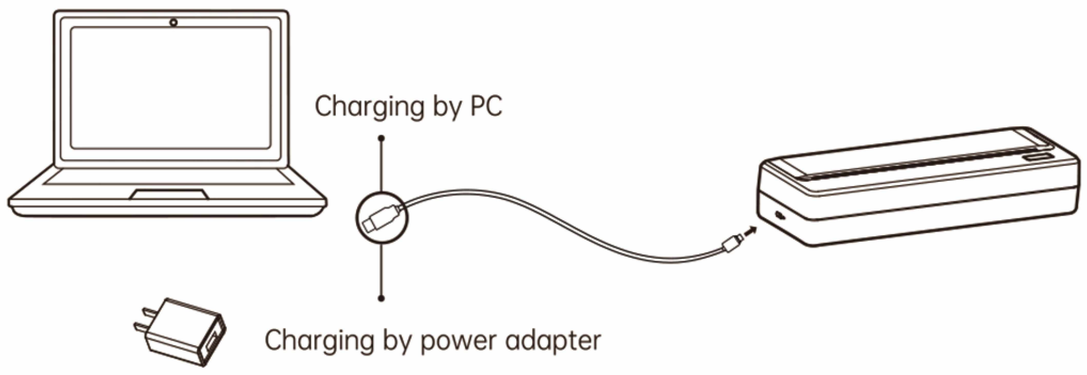

⚠ **Note:**

Can use a power adapter or computer USB power supply, shipped without an adapter. If consumers use a power adapter to charge, they should purchase a power adapter that is certified by CE&FCC and meets the requirements of the standard. If the user replaces the battery with the wrong model, there is a risk of explosion. Please be sure to return the used battery to the repair site according to the instructions.

Matters needing attention

1. the best working temperature of the printer is 0℃~45℃, such as the ambient temperature is too low or too high, may affect the print quality.
2. do not use unofficial power adapters and paper rolls to ensure print quality.
3. the printing head will heat during the printing process, do not touch the printing head to avoid burns.
4. do not forcibly pull out the paper during the printing process, so as not to damage the printer.
5. if you change the incorrect model of the battery pack will have the risk of explosion.
6. please do not put the battery into the fire or heating furnace, do not mechanically squeeze or cut the battery for disposal.
7. please do not place the battery in an extremely high temperature environment that may cause the battery to explode or leak flammable liquids or gases.
8. Please do not place the battery in an extremely low pressure that may cause the battery to explode or leak flammable liquids and gases.

Note: The tearing blade has a sharp edge, please be careful not to touch it to prevent cuts.

Warning: The print head is a hot part. Do not touch the print head and surrounding parts during the printing process or just after the printing. Children must use it under adult supervision.

Warning: do not touch the thermal print head surface and connector. Avoid electrostatic damage to the print head.

Warning: In the residential environment, running this device may cause radio interference.

Button, indicator definition

Key operation instruction

Situational model	Key operation
Power on	Press this key for 3 seconds, the red light will turn on for 0.3 seconds, switch to the green light, and enter the stable standby. xplode or leak flammable liquids and gases.
Power Off	Press this key for 3 seconds. The red light blinks rapidly at an interval of 0.3 seconds. After the shutdown, the indicator turns off.
Print QR code	Double click this button, print the QR code, and the phone can scan the QR code to connect to the machine;

Indicator description

Indicator status	Status declaration
The green light is on.	Normal state
Orange light on	Power is greater than or equal to 20%, less than 40%
The red light is steady on.	Charge below 20%
Red light flashing	Paper missing/movement overheating/ shaft not depressed
Red/orange/green flashing cycle	Charging state
Green blinks at intervals of 0.5 seconds	During printing

Frequently asked questions

Q: Can I charge it when it is off?

A: Yes! Plug in the Type-C USB charging cable in the off state, and the machine will wake up and charge automatically.

Q: How do I download the APP?

A: You can find the QR code scanning APP in the instructions inside the box or on the outside of the box

Q: What about the offset of the printed content?

A: Turn on the machine and recenter the roll.

Q: Can I use other brands of thermal paper?

A: As long as the thermal paper is heated by the thermal print head, it will develop, but the paper rolls of different manufacturers may cause poor printing results due to the different production quality, and the inferior paper rolls will also cause damage to the print head.

Q: The printer does not run paper?

A: Restart the machine and print again (may be caused by program loss), or check whether the print head and the roller are adhesive.

Q: Print blurry?

A: Wipe the print head, or choose high concentration printing when APP printing, or the machine may be low power.

Q: Can I print during charging?

A: It can be printed normally during charging.

Q: Can't Bluetooth connect properly?

A: Restart the machine, if the restart still does not work, try another phone connection.

Q: Why is the red light still on when the paper roll is loaded?

A: Put in the paper roll to pull out a piece to reach the roller position and then close. If the roller position is still not good, please clean the paper sensor.

FCC WARNING

This device complies with part 15 of the FCC Rules. Operation is subject to the following two conditions: (1) this device may not cause harmful interference, and (2) this device must accept any interference received, including interference that may cause undesired operation.
NOTE: This equipment has been tested and found to comply with the limits for a Class A digital device, pursuant to Part 15 of the FCC Rules. These limits are designed to provide reasonable protection against harmful interference when the equipment is operated in a commercial environment. This equipment generates, uses, and can radiate radio frequency energy and, if not installed and used in accordance with the instruction manual, may cause harmful interference to radio communications.
Operation of this equipment in a residential area is likely to cause harmful interference in which case the user will be required to correct the interference at his own expense.

WARNING
Changes or modifications not expressly approved by the party responsible for compliance could
void the user's authority to operate the equipment.This equipment complies with FCC radiation
exposure limits set forth for an uncontrolled environment.

Rongta Technology (Xiamen) Group Co., Ltd.

ADD: No.88, Tonghui South Road, Tongan, Xiamen, China.
WEB: www.rongtatech.com **TEL:** 0086-592-5666129
FAX: 0086-592-5659169

Bluetooth Connect for Phone and Tablet

Step 1

Search "SoPrint"in APP store
Or scan QR code on the product box to download

Google Play

APP Store

Step 2

Turn on Bluetooth and search the Device to Connect

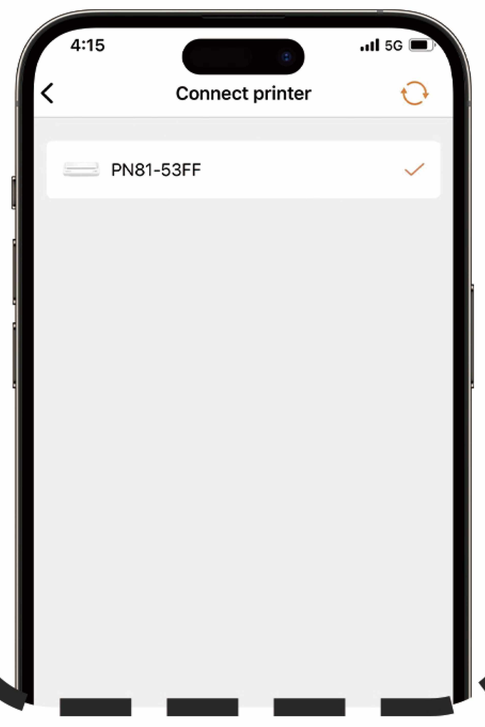

Step 3

Choose the file start printing

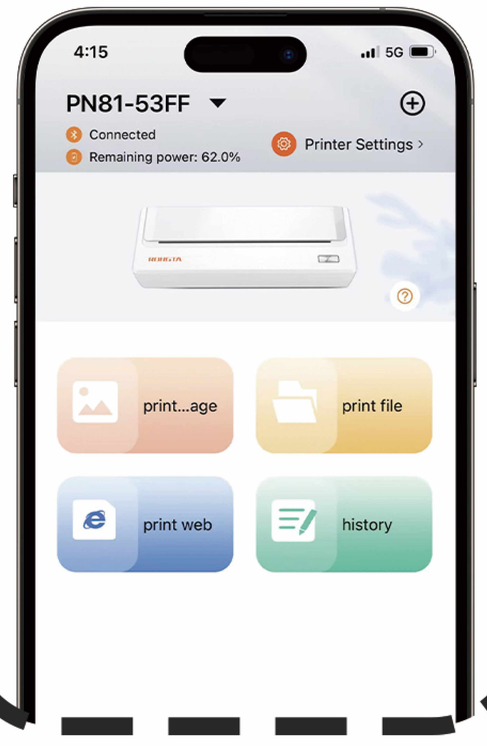

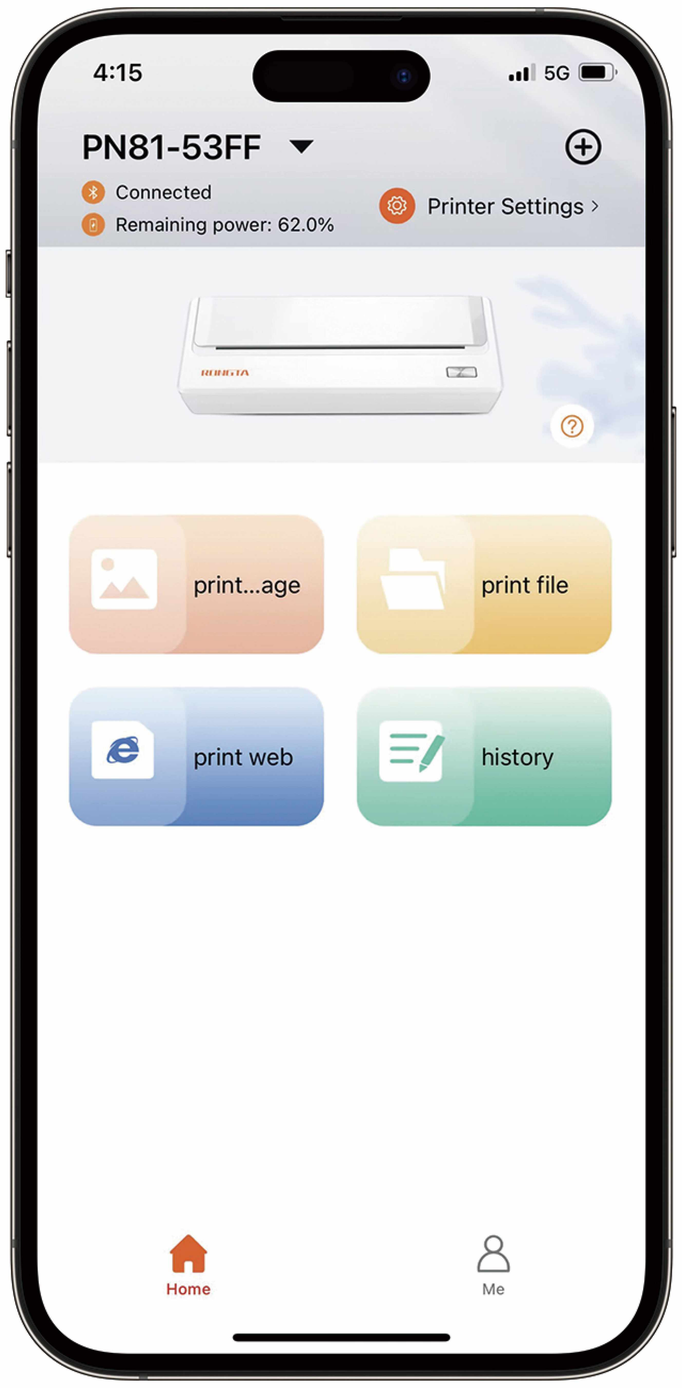

Note: Please click the "+" on the top right corner of the App homepage to search and connect to the printer. You can set print density and paper size, crop, zoom in or out, etc in the SoPrint app.

Type C USB Cable for Windows & MAC

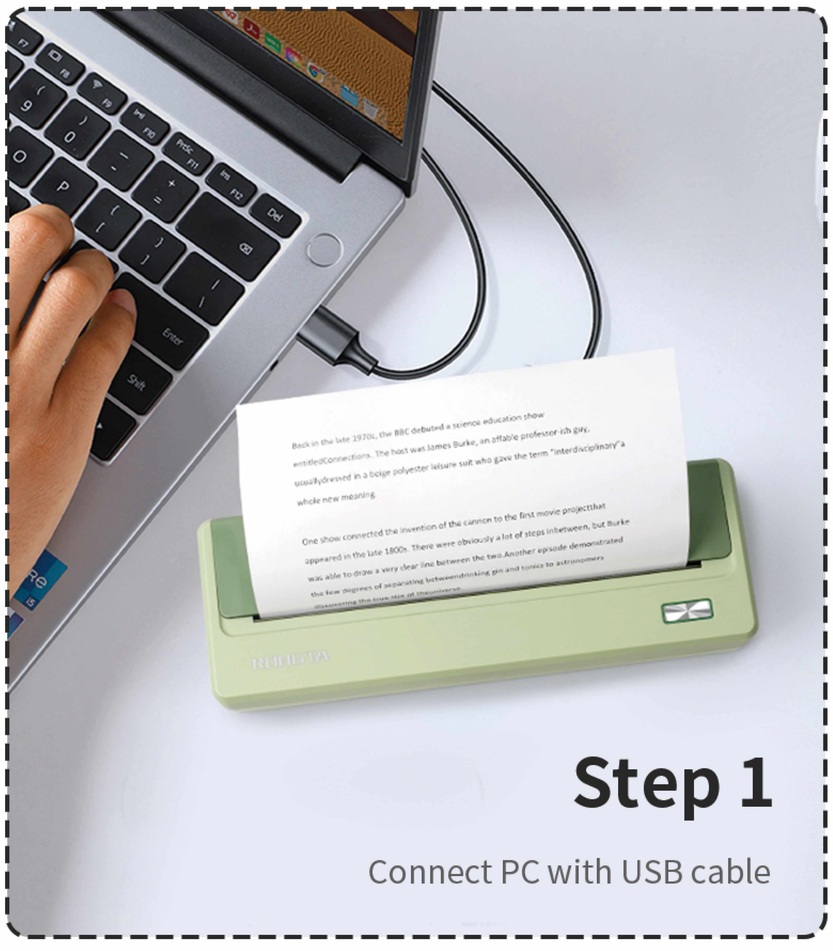

Step 1

Connect PC with USB cable

Step 2

Download the driver from USB flash drive or visit https://www.rongtatech.com/ (Search "PN81")

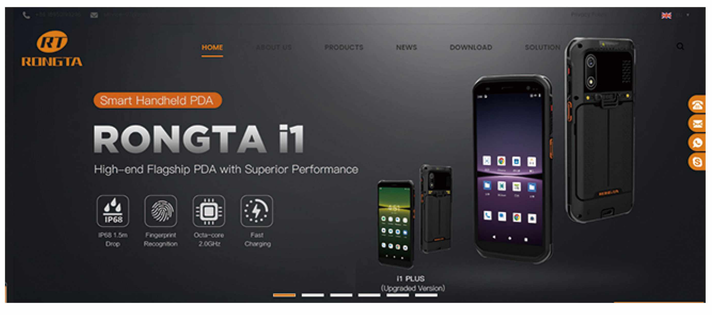

Step 3
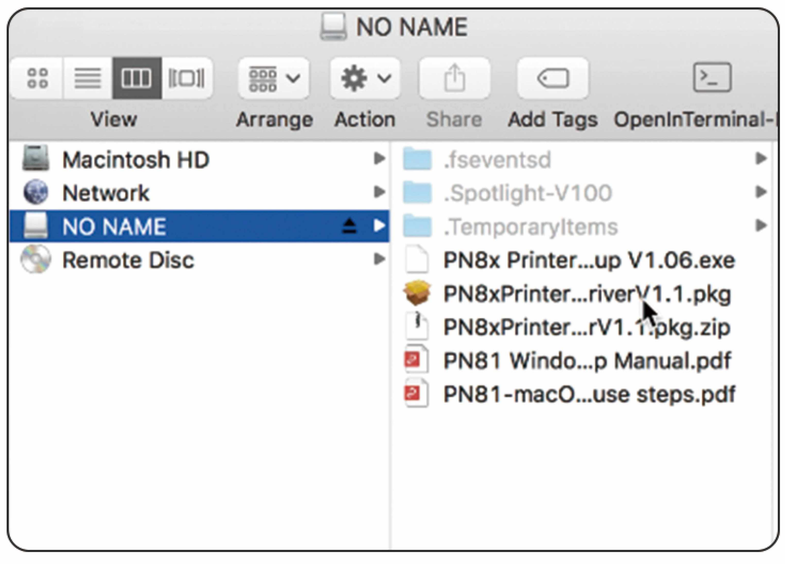
Install the driver according the install guide and start printing